HONEYWELL

See full Datasheet below...

Manual Switches
Advanced Manual Line

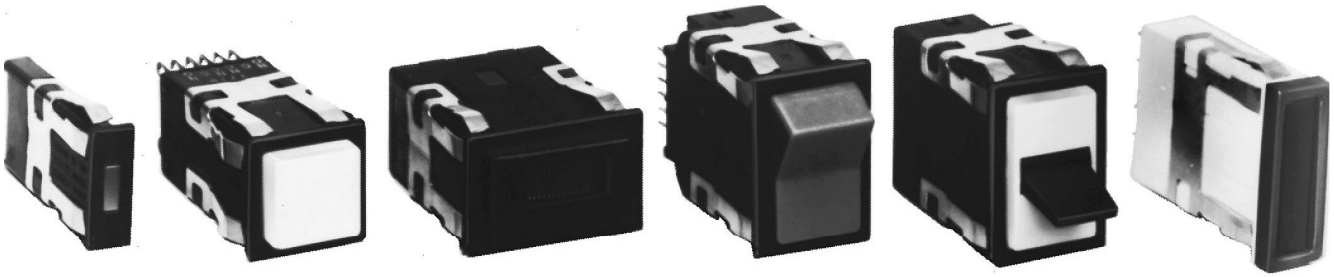

IN FRONT OF THE PANEL

Coordinated, attractive appearance. AML features innovations designed by industrial designers to achieve the best balance of human factors and aesthetic appearance. Operator height, bezel size, and the compatibility of square and rectangular shapes blend with other components to harmonize your panel. There's no visual clutter to distract from man/machine communication.

This comprehensive line of lighted and unlighted manual controls features:

- Pushbuttons for high and intermediate frequency functions;
- Rocker and paddle switches, with 2 or 3 positions, for less frequent control functions;
- Plus lighted indicators and annunciators which complement AML's universal appeal.

Various controls can be matched with their functions to accommodate the most natural and efficient habit pattern reflex. Keylock operated switches can be used to assure "authorized personnel only" access.

Display flexibility. AML offers a choice of five legend sizes, four button heights, full or split section display, and illumination by incandescent lamps, LED's or neons. Colors are bright and uniform, providing a strong definition and good visibility. (Non-illuminated devices have the same attractive colors.)

Color display options include:

- Transmitted color — color can be distinguished whether lamp is On or Off.
- Dead front — display appears black, until illumination causes legend and color to appear.
- Projected color — white display is diffused with color when illuminated.

BEHIND THE PANEL

AML's simple, cost effective design provides many behind-panel benefits for the designer and installer/user.

Simple to install. They snap in from the panel front individually or in vertical or horizontal strips; or in subpanel mounted strips and matrices that can be pre-assembled and pre-wired to assure accurate alignment and efficient panel building.

Electrical flexibility. Solid state switches with Hall effect integrated circuits interface directly with microprocessors and other logic level devices. These IC's were first applied in MICRO SWITCH solid state keyboards. Today, many MICRO SWITCH products incorporate the Hall effect technology to meet a wide range of position sensing and manual control needs.

Electronic control switches with gold or silver contacts, and 1, 2, or 4 poles, will handle up to 3 amps. Including an encoded version which generates different binary coded outputs merely by changing cam-keyed buttons.

Power duty switches meet line disconnect application needs with 10-amp pushbuttons and 15-amp paddle and rocker switches.

Easy to wire. All AML devices present single level termination. This means faster, easier, neater, and more economical wiring. And there is a choice of solder, quick-connect, push-on, and printed circuit termination.

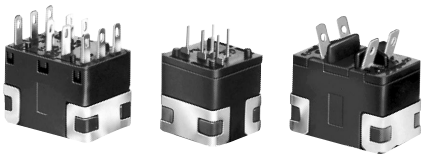

MATING RECEPTACLES

The .110 × .020 quick-connect/solder terminal (types 2 and 8) is designed for use with receptacles that comply with the UL standard for insertion and withdrawal forces. Maximum insertion force is 12 lbs. max., withdrawal force is 14 lbs. These receptacles are supplied by: AMP Inc., Berg, Augat, Hollingsworth, MALCO, Zierick, and others. Refer to Thomas Register or the Yellow Pages for the location of your local supplier.

Manual Switches
Advanced Manual Line

FEATURES
- Complete selection of pushbutton, rocker and paddle (toggle type) switches accommodates different functions and promotes operator efficiency.
- Solid state, electronic, and power duty control.
- Full or split screen incandescent display switches and indicators provide vivid transmitted color, projected color (for neutral display when unlit), and dead front (hidden color).
- Wide-angle visibility LED and line voltage neon display switches and indicators.
- Annunciators back-lighted by LED's enable high density message display.
- Keylock switches available for controlled access applications.
- All AML terminations at the same shallow depth (1.7 in. /43,1 mm) for convenient wiring or PC board termination.
- Snap-in surface mount or sub-panel (hidden bezel) mount with mounting hardware.
- Pad printed legends with a clear polyurethane overcoat available in a choice of five standard sizes.
- Metric design for worldwide acceptance.
- UL recognized, CSA certification.
- Selected listings are certified by VDE and CE. (For compliance status, contact the 800 number.)

MICRO SWITCH AML Advanced Manual Line combines functional flexibility with electrical versatility to provide a broad range of options to choose from.

EASY TO RELAMP

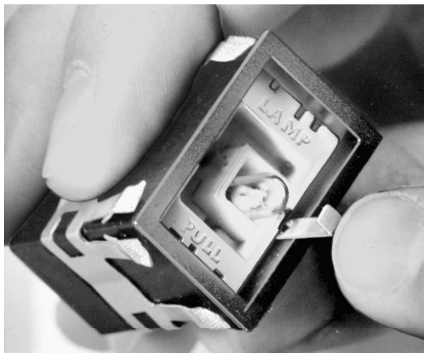

Relamping of T-1-3/4 incandescent AML91 lamps is accomplished from the front of the panel without tools. (AML92 T-1-3/4 LEDs can be added in the same manner.)

FULL GUARD BEZEL OPTION

As an alternative to standard height bezels (.06 in./1,5 mm), pushbutton switches can be furnished with full guard bezels extending .19 in./5.0 mm from the mounting surface. In the free position, standard buttons are flush with full guard bezels.

The raised bezel guards against accidental operation by someone leaning against or dropping something on a control console.

High Intensity LEDs For Full-face AML Lighted Display
AML92 Series

- Full-face illumination for high visibility lighted colors.
- Advanced illumination technology combines high-intensity LED in standard T-1-3/4 wedge base lamp package.
- Easy plug-in installation in AML lighted switches and indicators.
- Low operating temperature permits high density, continuous operation with minimal heat build-up.

AML92 Series LEDs have a quad chip assembled in a T-1-3/4 wedge base lamp package. They provide full-face illumination when used with lighted pushbutton, rocker and paddle switches, or indicators equipped with incandescent lamp sockets. For ordering information, **refer to page 46.**

AML CHARACTERISTICS

	AML 10 Series	AML 20 Series	AML 30 Series	AML 40 Series
Electrical/Mechnical Life*				N/A
Pushbuttons–Momentary	1,000,000	25,000 (silver)/ 100,000 (gold)	25,000	---
Pushbuttons–Alternate	25,000	25,000	25,000	---
Rockers	25,000	25,000	25,000	---
Paddles	25,000	25,000	25,000	---
Agency Ratings (May not apply to every series division)				
UL	File E53576	File E12252	File E12252	File E58932
CSA	File LR4442	File LR4442	File LR4442	File LR4442
VDE	None	File 0630/10.78+	File 0630/10.78+ +	None
CE		Rating 1710 No. 4275.5788	Rating 1710 No. 4275.5788	

* 95% Survival
+ Exception: Four-Pole AML's are not included in VDE Approval
+ + Exception: Only the 2-pole AML33 and AML34 are certified by VDE

AML ELECTRICAL DATA

- **AML10 Series**

Electrical Characteristics						Absolute Maximum Rating ④			
				Switching Time Max.					
Integrated Circuit Function	Supply Current (Max.)	Output Voltage (Operated)	Output Leakage Current max. (Released)	Rise 10% to 90%	Fall 90% to 10%	Supply Voltage (V_S)	Voltage Externally Applied to Output	Loads to Output	Storage Temperature
4.5-24 VDC Sinking	5 V 7.0 mA (Released) 24 V 9.0 mA (Released) 14.0 mA (Operated-no load)	+.4 Volt (Sinking 10 mA)	10 µA	1.5 µ sec (Sinking 10 mA)	0.5 µ sec (Sinking 10 mA)	–30 to +30 VDC	–0.5 Volt min. +24 Volts max. (Off condition)	20 mA (Sinking)	–40–C to +65°C (–40° to +149°F)

① Over temperature range of 0° to +55°C (+32° to +131°F) and supply voltage of 4.5 to 5.5 VDC.
② Over temperature range of 0° to +55°C (+32° to +131°F) and supply voltage of 16 VDC.
③ At 24°C. (+75°F)
④ As with all solid state components, performance can be expected to deteriorate as rating limits are approached; however, they will not be damaged unless the limits are exceeded.

- **AML20 Series**

Contacts	Voltage	Current	Load Type
Silver or Gold-plated Silver	250 VAC 125 VAC 24 VDC	2 Amps 3 Amps 2 Amps	75% Power Factor 75% Power Factor Resistive
Gold	125 VAC/DC	100 mA	Resistive

- **AML30 Series**

Voltage	Current		Load Type
	Pushbuttons	Rockers or Paddles	
125 VAC	10 amps	15 amps	60% power factor
250 VAC	10 amps	15 amps	60% power factor

Manuals

Electronic Control Pushbutton

INCANDESCENT OR NON-LIGHTED DISPLAY

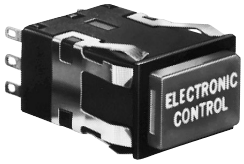

Buttons ordered separately.

FEATURES

- 1, 2, or 4 poles.
- Silver or gold contacts.
- Full guard bezel option.
- Momentary or 2-level alternate action (push-on, push-off).
- UL recognized, CSA certified.
- Lamps can be furnished installed or ordered separately.
- Lamp circuit independent of switch circuit.

*AML21 Series: 1 pole and 2-pole only.

AML21 ORDER GUIDE

AML21 B **B** **A** **2** **AA**

Housing Type	Bezel Color	Incandescent Lamp Type	Terminal Type	Circuitry Codes (Each pole has double-throw)	
Standard Bezel: **AML21B** Square Non-Lighted **AML21C** Square 1 Lamp Ckt. **AML21E** Rect. Non-Lighted **AML21F** Rect. 1 Lamp Ckt. **AML21G** Rect. 2 Lamp Ckts. **Full Guard Bezel:** **AML21H** Square Non-Lighted **AML21J** Square 1 Lamp Ckt. **AML21K** Rect. Non-Lighted **AML21L** Rect. 1 Lamp Ckt. **AML21M** Rect. 2 Lamp Ckts.	**B** Black	**A** No Lamp Installed **B** 6 V Lamp* **C** 14 V Lamp* **E** 28 V Lamp*	**2** .110 × .020 (Solder or Quick-Connect) **3** .025 × .025 (Printed Ckt. or Push-On)	Silver Contacts	Mom. Action **AA** 1-Pole **AC** 2-Pole **CC** 4-Pole
					Alt. Action **AB** 1-Pole **AD** 2-Pole **CD** 4-Pole
				Gold Contacts	Mom. Action **BA** 1-Pole **BC** 2-Pole **DC** 4-Pole
					Alt. Action **BB** 1-Pole **BD** 2-Pole **DD** 4-Pole
				Gold-Plated Silver Contacts	Mom. Action **EA** 1-Pole **EC** 2-Pole
					Alt. Action **EB** 1-Pole **ED** 2-Pole

* Lamps will be installed per each lamp circuit specified in the Housing Type.

Example: **AML21BBA2AA**
Square pushbutton switch housing non-lighted; black bezel; .110 × .020 termination; momentary action; 1-pole, double-throw; silver contacts.

Manual Switches
Electronic Control Pushbutton

LED DISPLAY

Buttons with LED "window" ordered separately.

LEDs are not replaceable.

FEATURES

- Identical to AML21 switches, except furnished with high efficiency LED display.
- Rectangular LED's are flush with button surface, providing wide angle indication.
- Optional diode protection for LED's.
- 5 thru 24 VDC LED devices have an internal resistor to maintain current at nominal 20 mA.
- UL recognized, CSA certified.
- LED circuit independent of switch circuit.

*AML22 Series: 1 pole and 2-pole only.

AML22 ORDER GUIDE

AML22 C — Housing Type

Standard Bezel:
AML22C Square 1 LED
AML22H Square 1 High-Profile LED (For use with AML52-A buttons)

Full Guard Bezel:
AML22J Square 1 LED

B — Bezel Color

B Black

B — LED Color/Voltage

Red	
B	V*
C	5V
D	10V
E	15V
F	24V
Yellow	
H	V*
J	5V
K	10V
L	15V
M	24V
Green	
R	V*
S	5V
T	10V
W	15V
X	24V

2 — Terminal Type

2 .110 × .020 (Solder or Quick-Connect)

3 .025 × .025 (Printed Ckt., or Push-On)

8 .110 × .020 With Diode Protection for LED

AA — Circuitry Codes (Each pole has double-throw)

Silver Contacts	Mom. Action **AA** 1-Pole **AC** 2-Pole **CC** 4-Pole
	Alt. Action **AB** 1-Pole **AD** 2-Pole **CD** 4-Pole
Gold Contacts	Mom. Action **BA** 1-Pole **BC** 2-Pole **DC** 4-Pole
	Alt. Action **BB** 1-Pole **BD** 2-Pole **DD** 4-Pole
Gold-Plated Silver Contacts	Mom. Action **EA** 1-Pole **EC** 2-Pole
	Alt. Action **EB** 1-Pole **ED** 2-Pole

* See LED information for devices without current limiting resistor, page 46.

Example: **AML22CBB2AA**
Square pushbutton switch housing with one LED, black bezel; red LED (without resistor); .110 × .020 termination; momentary action, 1-pole, double-throw; silver contacts.

CONTACT ARRANGEMENT

1, 2 or 4 poles: Form C

Manuals

Manual Switches

Buttons/Lens for Switches and Indicators

AML51 PUSHBUTTON ORDER GUIDE (All possible color combinations may not be available.)

For Incandescent or non-lighted display switches and pushbutton style indicators.

AML51-C **10** **R** **—**

For AML11, 21, 31 switches and AML41 indicators: Pushbutton Style

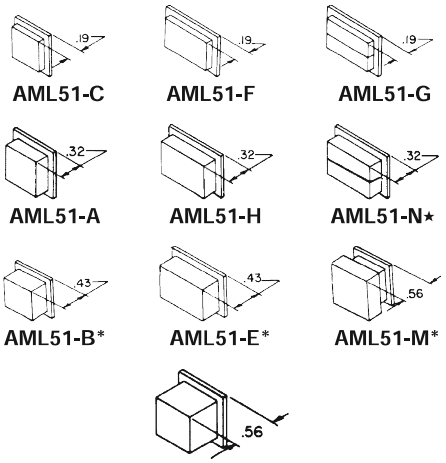

For AML41D indicators only:

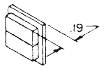

* Available with transmitted color (10 or 20) only.
**** Insert is clear for projected color when "W" is used.

Display Legend/Type

Transmitted Color
10 No legend
20 With legend on cap.

Transmitted Color (Clear cap and color insert)
11 No legend
21 With legend on insert

Dead Front (Smoky gray cap and color insert)
30 No legend
40 With legend on insert

******Projected Color** (White cap and color insert)
50 No legend
60 With legend on cap

Full Color or 1st Color Split

R Red
Y Yellow
G Green
B Blue
W**** White
K*** Black
L*** Gray
A** Amber

2nd Color Split

R Red
Y Yellow
G Green
B Blue
W**** White
K*** Black
L*** Gray
A** Amber

Example: **AML51-C10R**
Square full color button; with transmitted color, no legend; red.

** Available with transmitted color and dead front only.
*** Black and gray not recommended for lighted display.
† AML51-N buttons not available with Display/Legend Types 10 and 20.
Note: Dimensions include the .060 in bezel.

AML51 LENS ORDER GUIDE (All possible color combinations may not be available.)

For incandescent display AML41J, K, and L lens style indicators only.

AML51-J **10** **R**

Lens style

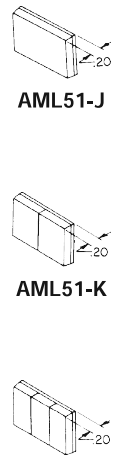

Display/Legend Type

Transmitted Color
10 No legend
20 With legend

Transmitted Color (Clear cap and color insert)
11 No legend
21 With legend

Dead Front (Smoky gray cap and color insert)
30 No legend
40 With legend

******Projected Color** (White cap and color insert)
50 No legend
60 With legend

Full Color or 1st Color Split	2nd Color Split	3rd Color Split
R Red	**R** Red	**R** Red
Y Yellow	**Y** Yellow	**Y** Yellow
G Green	**G** Green	**G** Green
B Blue	**B** Blue	**B** Blue
W**** White	**W****** White	**W****** White
A** Amber	**A**** Amber	**A**** Amber

** Not available with projected color.
**** Insert is clear for projected color when "W" is used.

AML51 lens buttons provide added display area by snapping onto and covering the bezel of AML41J, K, and L indicators. They do not fit other indicators or switches.

Example: **AML51-J10R**
Rectangular lens type button; full color; transmitted color, no legend; red.

HOW TO ORDER BUTTON LEGENDS

When specifying legended buttons, submit a legend order sheet to cover each listing. To insure proper legend orientation, AML housings (when viewed from the panel front) should have the "MICRO SWITCH" identification facing UP on square devices and UP or to the LEFT on rectangular.

Button legend order sheets are shown on the following pages. Reproduce them on your office copier.

Legend Sheet	Form No.
AML51 Pushbuttons	FO-63394
AML51 Lens buttons	FO-63395
AML52 Pushbuttons	FO-63504
AML53 Paddle switch covers	FO-63567
AML55 Paddle switch covers	FO-63565
AML54 Rockers	FO-63566
AML56 Rockers	FO-63564

Buttons for Switches and Indicators

AML52 BUTTON ORDER GUIDE (All possible color combinations may not be available.)
For AML12, AML22 (w/o light pipe), AML32, AML42 LED display.

AML52-N **10** **R**

Button Type	Display/Legend Type	Button Color
For LED Devices **AML52-C**  **AML52-A*** 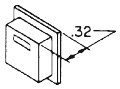	**Transmitted Color** **10** No Legend **20** With Legend	**R** Red **Y** Yellow **G** Green **B** Blue **W** White **K** Black **A** Amber **L** Gray
For AML32 Neon Devices **AML52-N** 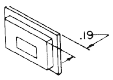		

Examples:
AML52-N10R
Rectangular full screen; for use on neon power switch with transmitted color, no legend; red button.

AML52-C10K
Square full screen; for use with LED device; transmitted color, no legend; black button.

Manuals

Honeywell

AML 52/57 Pushbutton Legend Sheet/Product Specification for L.E.D. & Neon Button

Page ____ of _____

Account No _____

Catalog Listing		
AML52 –		
Customer P.O. No.	Customer Dwg. No.	
MICRO SWITCH Sales Order	Line Number	Schedule No.

Customer: _____

Address: _____

_____ (city) _____ (state)

LEGEND ORDER GUIDE

Button: Type Orientation	Figure NO	Max Lines 5/64	7/64	9/64	13/64	5/16	Max Characters 5/64	7/64	9/64	13/64	5/16
C	1	3	2	1	1	1	7	5	5	3	1
C	2	3	2	1	1	1	7	5	5	3	1
N	3	1	1	0	0	0	12	10	0	0	0
N	4	1	1	0	0	0	12	10	0	0	0
A	5	3	2	1	1	1	7	5	4	3	1
A	6	3	2	1	1	1	7	5	4	3	1

Instructions

1. Fill in appropriate catalog listing - one listing/sheet.
2. Check proper figure #. Type size, type color.
3. Fill in quantity required.
4. Indicate legends desired — Do not exceed maximums shown in legend order guide.

Note

1. For Proper Legend Orientation, AML housings (when viewed from front of panel) should have "MICRO SWITCH" logo oriented "UP" on square devices and "UP" or to the"LEFT" on rectangular devices.
2. Please use black ink in filling out this form to help us process your order.

Standard Legend Placement

1. Transmitted Color — Legend on outer shell (Button)
2. Figures 3 and 4 not applicable for AML57 listings

Modified Gothic lettering (A thru Z). numerals (0 thru 9) and Symbols below available in 5/64, 7/64, 9/64, 13/64 and 5/16.

A3
Modified Gothic

.	,	:	;	!	?	'	_	"	/	(	)	*	&
$	c	#	%	°	+	-	±	÷	x	=	≠	>	<
→	↑	↓	←	CR	1/4	1/2	3/4	1/3	2/3	@	∞		

LEGEND ORDER CHART

Customer Part NO	Fig NO	Type Size 5/64	7/64	9/64	13/64	5/16	Ink Color Black	White	Button Qty	Legend Description Sequence: Left-to-Right or Top-to=Bottom 1st Line	2nd Line	3rd Line

SPECIAL LEGENDS

NOTE: Use this area to show special Legend Locations or Configurations NOT shown above. NON-STANDARD legends will involve additional charges and increased delivery time.

Fig. "A" | Fig. "B"

Sheet Prepared By: _____ (Signature) _____ (Date)

FO-63504-D

Honeywell

AML Pushbutton Legend Sheet/Product Specification

Page____of_____

Account NO 126 - 284

LEGEND ORDER GUIDE

Button: Type Orientation	Figure NO	Max Lines/Area 5/64	7/64	9/64	13/64	5/16	Button Filter	Max Characters/Line 5/64	7/64	9/64	13/64	5/16
AREA 1 A*B P,R	1	4/*3	3/*2	3/*2	2/*1	1/*1		7/*5	5/*4	5/*3	3/*2	1/*1
AREA 1 C	2	4/3	3/2	3/2	2/1	1/1		7/5	5/4	5/3	3/2	1/1
AREA 1 2 D	3	1/1	1/1	1/1	0/0	0/0		7/5	5/4	5/3	0/0	0/0
AREA 1 E,H*	4	4/*3	3/*2	3/*2	2/*1	1/*1		11/*10	9/*8	8/*7	5/*5	3/*3
AREA 1 E,H*	5	6/*6	4/*4	4/*4	3/*3	2/*2		7/*5	5/*4	5/*3	3/*2	1/*1
AREA 1 F	6	4/3	3/2	3/2	2/1	1/1		11/10	9/8	8/7	5/5	3/3
AREA 1 F	7	6/6	4/4	4/4	3/3	2/2		7/5	5/4	5/3	3/2	1/1
AREA 1 2 G,N	8	1/1	1/1	1/1	0/0	0/0		11/10	9/8	8/7	0/0	0/0
AREA 1 M	9	5/0	4/0	3/0	2/0	1/0		8/0	6/0	6/0	3/0	1/0

Definitions of Markings

Thru holes to snap into indicator housings

Internal reliefs to snap over switch plunger tabs

Standard Legend Placement –

Use special legends sec. for other placements

1. Transmitted Color — Legend on outer shell (Button)
2. Dead Front - Legend on Insert
3. Projected Color - Legend on outer shell (Button)
4. Transmitted color with clear cap legend on insert

Catalog Listing AML51 –		
Customer P.O. No.	Customer Dwg. No.	
MICRO SWITCH Sales Order	Line Number	Schedule No.

Customer: _____

Address: _____
(city) (state)

Instructions

1. Fill in appropriate catalog listing - one listing/sheet.
2. Check proper figure #. Type size, Type color.
3. Fill in quantity required.
4. Indicate legends desired — Do not exceed maximums shown in legend order guide.

Note

1. For Proper Legend Orientation, AML housings (when viewed from front of panel) should have "MICRO SWITCH" logo oriented "UP" on square devices and "UP" or to the"LEFT" on rectangular devices.
2. Please use black ink in filling out this form to help us process your order.
3. * INSERT ONLY ON STYLE A & H BUTTON

Modified Gothic lettering (A thru Z). numerals (0 thru 9) and Symbols below available in 5/64, 7/64, 9/64, 13/64 and 5/16.

A3
Modified Gothic

STANDARD SYMBOLS AVAILABLE

.	,	:	;	!	?	'	_	"	/	(	)	*	&	
$	¢	#	%	°	+	-	±	÷	x	=	≠	>	<	
→	↑	↓	←	CR	1/4	1/2	3/4	1/3	2/3	@	∞			

SPECIAL LEGENDS

NOTE: Use this area to show special Legend Locations or Configurations NOT shown to the left. NON-STANDARD legends will involve additional charges and increased delivery time.

Fig. "A" | Fig. "B"

LEGEND ORDER CHART

Customer Part No	Fig No	Type Size 5/64	7/64	9/64	13/64	5/16	Ink Color Black	White	Button Qty	AREA	1st Line	2nd Line	3rd Line	4th Line	5th Line	6th Line
										1						
										2						
										1						
										2						
										1						
										2						
										1						
										2						
										1						
										2						

Sheet prepared by:

_____
(Signature)

_____
(Date)

FO-63394-K

Honeywell

AML Lens Legend Sheet/Product Specification

Page____of _____

Account No _____

LEGEND ORDER GUIDE

Button: Type Orientation	Figure No	Max Lines 5/64	7/64	9/64	13/64	5/16		Max Characters 5/64	7/64	9/64	13/64	5/16
AREA 1 J	1	4/4	3/3	3/3	2/2	1/1	Button/Filter	14/13	11/10	10/9	7/6	3/3
AREA 1 2 K	2	4/4	3/3	3/3	2/2	1/1		6/5	6/5	6/5	3/3	1/1
AREA 1 2 3 L	3	4/4	3/3	3/3	2/2	1/1		4/3	3/3	3/3	2/1	1/1
AREA 1 J	4	4/4	3/3	3/3	3/3	2/2		9/8	7/6	7/6	4/3	2/2
AREA 1 2 K	5	3/3	2/2	2/2	1/1	1/1		8/7	7/6	7/6	4/3	2/2
AREA 1 2 3 L	6	2/2	1/1	1/1	1/1	0/0		8/7	7/6	7/6	4/3	0/0

Standard Legend Placement

1. Transmitted Color — Legend on outer shell (Button)
2. Dead Front - Legend on Insert
3. Projected Color - Legend on outer shell (Button)

Catalog Listing AML51 –		
Customer P.O. No.	Customer Dwg. No.	
MICRO SWITCH Sales Order	Line Number	Schedule No.

Customer: _____

Address: _____
(city) (state)

Instructions

1. Fill in appropriate catalog listing - one listing/sheet.
2. Check proper figure #. Type size, type color.
3. Fill in quantity required.
4. Indicate legends desired — Do not exceed maximums shown in legend order guide.

Note

1. For Proper Legend Orientation, AML housings (when viewed from front of panel) should have "MICRO SWITCH" logo oriented "UP" on square devices and "UP" or to the"LEFT" on rectangular devices.
2. Please use black ink in filling out this form to help us process your order.

LEGEND ORDER CHART

Customer Part No	Fig No	Type Size 5/64	7/64	9/64	13/64	5/16	Ink Color Black	White	Button Qty	AREA	Legend Description Sequence: Left-to-Right or Top-to=Bottom 1st Line	2nd Line	3rd Line	4th Line
										1				
										2				
										3				
										1				
										2				
										3				
										1				
										2				
										3				
										1				
										2				
										3				

Modified Gothic lettering (A thru Z). numerals (0 thru 9) and Symbols below available in 5/64, 7/64, 9/64, 13/64 and 5/16.

A3
Modified Gothic

.	,	:	;	!	?	'	_	"	/	(	)	*	&
$	¢	#	%	°	+	-	±	÷	x	=	≠	>	<
→	↑	↓	←	CR	1/4	1/2	3/4	1/3	2/3	@	∞		

SPECIAL LEGENDS

NOTE: Use this area to show special Legend Locations or Configurations NOT shown above. NON-STANDARD legends will involve additional charges and increased delivery time.

Fig. "A" | Fig. "B"

FO-63395-E

Sheet Prepared By: _____ _____
(Signature) (Date)

Barriers/Panel Seal Accessories

AML71 BARRIERS

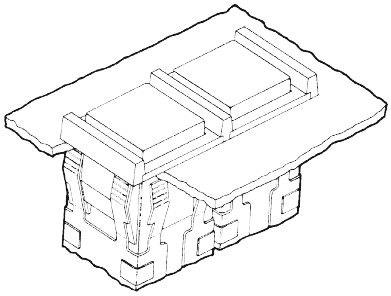

Drawing shows two switches, slot mounted. From left to right: one center barrier, a second switch, plus another end barrier to complete the arrangement.

When mounting an individual unit, an end barrier is attached to each side of the housing. The center barrier is used in a slot mount array.

FEATURES

- Barriers separate individually mounted switches and indicators — help prevent inadvertent actuation of two pushbutton switches with a single push.
- Front of panel mounting simplifies installation.

AML71 BARRIER ORDER GUIDE (See notes)

Barriers shown in order guide are black.

Barrier Length	Type	Catalog Listing
Short (For use with square devices and short side of rectangular devices.)	Center	AML71SCB
	End	AML71SEB
Long (For use with long side of rectangular devices.)	Center	AML71LCB
	End	AML71LEB

Notes:
Not for use with AML61 mounting hardware or any full guard bezel products.
Not for use with AML41J, K, or L lens type indicators; or AML45 annunciators.

AML75 PANEL SEAL

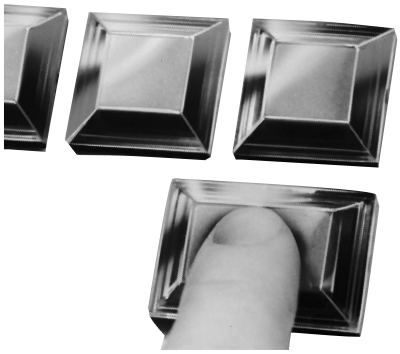

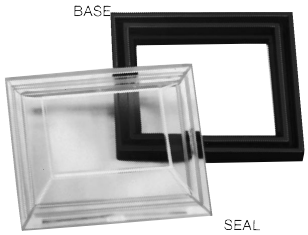

MATERIAL
Base: Polypropylene
Cap: Polyvinyl Chloride

FEATURES

- AML75 panel seals fit pushbutton switches and indicators.
- Provides protection from contamination from accidental beverage spills, dust, and dirt.
- Easy to install, without tools
- No effect on display color, light intensity, or legend quality.
- Replace seal or change lamps without removing switch from panel.
- For .19-inch standard height square or rectangular pushbuttons.
- Mounting dimensions page 53.

The design complements AML's functional appearance, creating a pleasing framed effect around the button. It consists of a matte black plastic base which press-fits between the panel and switch bezel, and a transparent flexible seal which snaps into the base. PK 8521, shipped with each order, provides installation instructions.

Button colors and legends can be viewed without distortion whether lighted or unlighted. Seals can be conveniently replaced or removed for relamping, without removing the switch from panel.

Operating temperature range is 32° to 131°F (0° to 55°C).

AML75 PANEL SEAL ORDER GUIDE

Description	For Use With: Square .19″ high pushbuttons	Rectangular .19″ high pushbuttons	Rockers
Base & Seal	AML75ABC	AML75BBC	AML75RBC

Notes:
Multiple units should not be mounted in a single slot, since this would create an unsealed space between each unit. AML75 seals are not for use with barriers, full guard bezels, AML61 mounting hardware, AML45 annunciators, or AML41J, K, or L lens type indicators.

Switch Guard/Panel Plugs, Dummy Housings

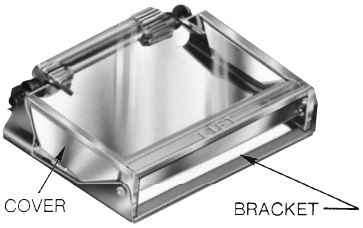

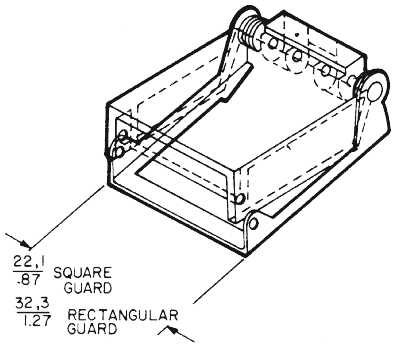

FEATURES

- Button cannot be operated when switch guard cover is closed, preventing accidental operation
- Wire lock-down feature further prevents unintentional actuation of the switch.
- Lamps can be replaced with the switch guard attached, without special tools, saving maintenance time
- Can be used with alternate or momentary action square or rectangular .19 inch standard height AML buttons
- Shock resistant construction, for long, maintenance-free life

AML76 switch guard protects square and rectangular .19-inch standard height pushbuttons from inadvertent actuation. It is for use with standard bezel type switches only.

See page 53 for mounting dimensions.

The switch guard cover is clear, polycarbonate thermoplastic through which the button is easily visible. The word "lift" is molded onto the top front edge of the guard. The bracket is bright-finished stainless steel.

The switch guard may be assembled to the AML pushbutton before the switch is installed in a panel. Or, the guard can be assembled to a pushbutton already mounted in a panel, providing the wiring is sufficiently slack to raise the switch bezel above the panel; and if there is sufficient clearance with adjacent units. PK 8522 contains installation instructions and is shipped with each order.

AML switch guards may be mounted in horizontal or vertical matrices. A wire lock-down feature, using .020-inch diameter locking wire, may be used as an additional protection.

SWITCH GUARD ORDER GUIDE

Guard Type*	Catalog Listing
Square	AML76C10T01P
Rectangular	AML76F10T01P

* The word "LIFT" is molded into the cover. If other languages are desired contact the 800 number.

Note: Switch guard is not designed for use with AML61 mounting hardware, AML71 barriers, or full guard bezel switches.

CONNECTOR BLOCK

AML79CC

This connector block can be used with square 1 and 2 pole AML21 and AML22 switches with .110 × .020 terminals to enable plug-in wiring.

Manuals

AML78 PANEL PLUGS

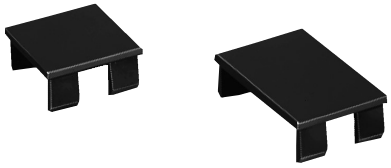

Plastic panel plugs (shown above) enable the user to provide for future needs by punching extra panel holes. Finished in matte black, they are the same height as the standard AML bezel when snapped in place from the panel front.

Panel plugs are only for use in individual holes or with AML61 mounting hardware in multi-station strips. (Use dummy housings in strip cutouts without AML61 mounting hardware.)

PANEL PLUG ORDER GUIDE

Plug Type	Catalog Listing
Square	AML78CB
Rectangular	AML78FB

AML78 DUMMY HOUSINGS

Dummy housings can be used to provide for expansion needs in strip cutouts without AML61 mounting hardware. They have mounting clips, but there is no provision for switching or illumination.

DUMMY HOUSING ORDER GUIDE

Dummy Housing Type*	Catalog Listing
Rectangular (Pushbutton style)	AML78F100
Rectangular (Lens indicator style)	AML78J100

* Order AML51 Buttons/lenses for use with dummy housings.

Lamps, Soldering Recommendations, Receptacles

AML91 LAMP ORDER GUIDE

Lamp Type	Industry Lamp No.	Voltage	Catalog Listing
Incandescent T-1-3/4 wedge base	86	6.3	AML91LA86
	73	14.0	AML91LA73
	85	28.0	AML91LA85

LAMP DATA

The following data was compiled from manufacturer's specifications, for reference only.

INCANDESCENT LAMPS

Industry Lamp No.	Volts	Amps	Watts	MSCP	Life A/C Volts
86	6.3 5.5 5.0	.200 .185 .177	1.25 1.12 .89	.49 .246 .185	20,000 hours 106,200 hours 290,000 hours
73	14.0 12.0	.080 .077	1.12 1.00	.30 .23	15,000 hours 36,450 hours
85	28.0 24.0	.04 .037	1.12 .89	.30 .177	7,000 hours 41,860 hours

Neon Lamps

25,000 hours (half life)

INTEGRAL LEDs

LEDs Furnished Permanently Installed in These Products	V_f	I_f	V_{PD}	Peak Inverse Voltage w/o Diode Protection	Peak Inverse Voltage w/Diode Protection
AML12, 15, 16, 22, 25, 26, 42	2.4 V	20 mA	.7 V	5 V	34 V
AML45	2.4 V	20 mA	.7 V	4 V	33 V

100,000 hours (half life).

AML92 SERIES LEDs

For use with these AML switches and indicators equipped with lamp sockets:
Pushbutton switches: AML11 (Square Only)*, AML21 (rectangular and square), and AML31.
Paddle switches: AML31/23/33
Rocker switches: AML14/24/34
Indicators: AML41
* Rectangular solid state with one or two lamp circuits cannot be used with LED catalog listings ending in "L".

AML92 ORDER GUIDE

LED Color	Quad Chip	Six Chip
Red	AML92ERY	AML92ERL
Green	AML92EGY	AML92EGL
Yellow	AML92EYY	AML92EYL
White	—	AML92EWL**

** For use with white or yellow buttons.

OPERATING CHARACTERISTICS

Type	V_F Fwd. Voltage (typ.) Yellow	Green	Red	White	I_F Fwd. Current	V_R Rev. Voltage
Quad Chip	8.6	8.6	7.8	—	15 mA	16 V
Six Chip	4 V	4 V	4 V	4 V	50 mA	5.6 V

TEMPERATURE RANGE

(Quad Chip or Six Chip)
Operating: –20 to 60°C (–4 to 140°F)
Storage: –30 to 100°C (–22 to 212°F)

SOLDERING RECOMMENDATIONS

All terminals are solder plated. Proper soldering and cleaning procedures must be followed to maintain the reliability of AML products during installation. An instruction sheet which outlines these procedures is included with AML shipments. You may also obtain a copy from your MICRO SWITCH Sales Office. Request PK 8518.

As a general guide, the following information may be used:

Use a 280°C (538°F) solder iron tip, up to 6 seconds duration, with a 60-40 rosin core solder. This allows the terminal to heat quickly on the exterior of the housing only, and greatly reduces the chance of flux migrating inside the housing.

LED APPLICATION INFORMATION

For those devices without internal current limiting resistors, suitable external control of the LED current must be provided. It is recommended that a minimum of 5 VDC open circuit voltage with an appropriate series resistance be used to drive LED devices. This minimizes the effect of temperature (current variation) on forward voltage of the LED.

Resistor values can be determined by supply voltage or current for LED:

$$R_S = \frac{E - V_f}{I_f}$$

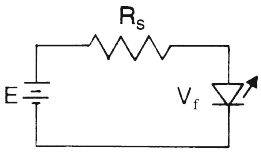

WHERE: R_S = Series Resistance
E = Supply Voltage
V_f = Forward Voltage of LED
I_f = Circuit Current

If a diode is added in series for reverse polarity protection then:

$$R_S = \frac{E - V_f - V_{PD}}{I_f}$$

WHERE: V_{PD} Forward Voltage of Protection Diode

Mounting Dimensions (For Reference Only)

AML11/12 and 21/22 SWITCHES
AML41C/D and AML42C INDICATORS

Note: Top of full guard bezel housing .19/5,0 from panel.

PUSHBUTTONS

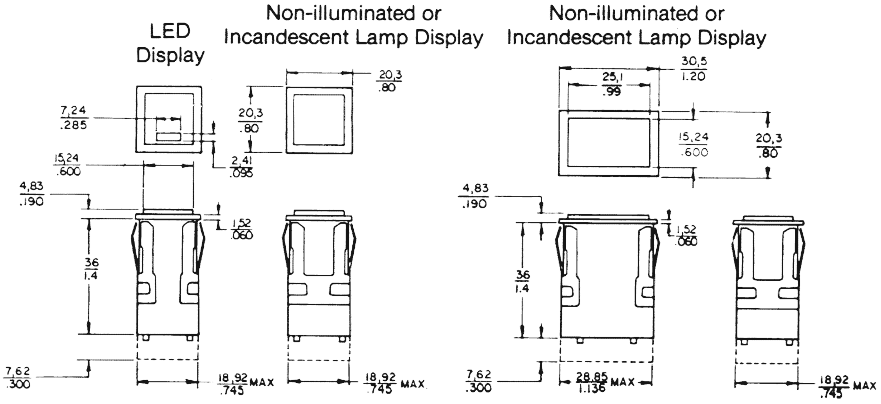

For terminal locations, see page 49.

AML27 SWITCHES

KEYLOCK

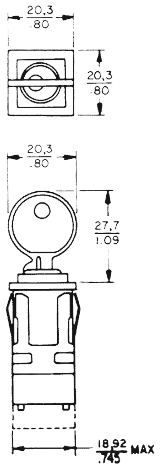

For terminal locations, see page 50.

AML14/16 and AML24/26 SWITCHES

ROCKERS

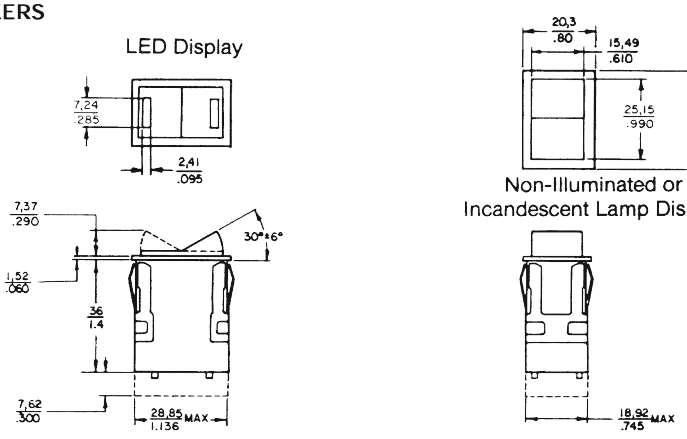

For terminal locations, see page 49/50.

AML13/15 and 23/25 SWITCHES

PADDLES

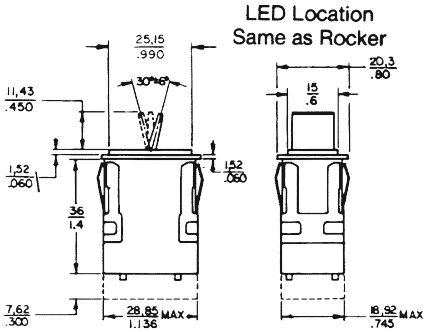

For terminal locations, see page 49/50.

AML41 INDICATOR

LENS STYLE

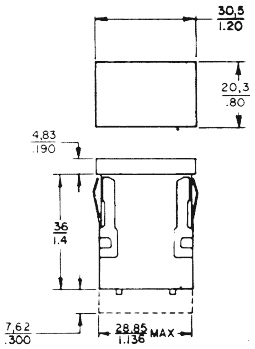

AML42 INDICATOR

MINIATURE

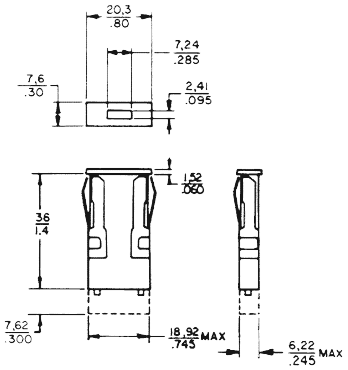

For terminal locations, see page 50.

NOTE
1 Dimensions are mm or mm/IN
IN

TERMINAL TYPES

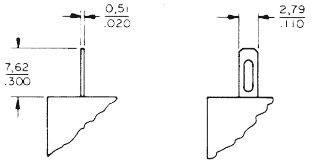

Solder or Quick Connect

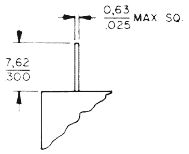

Printed Circuit

Solder Hole will accept two #22 AWG Stranded Conductor (per NEMA publication DC-2 1976)

Manuals

Mounting Dimensions (For Reference Only)

AML75 PANEL SEAL ACCESSORY

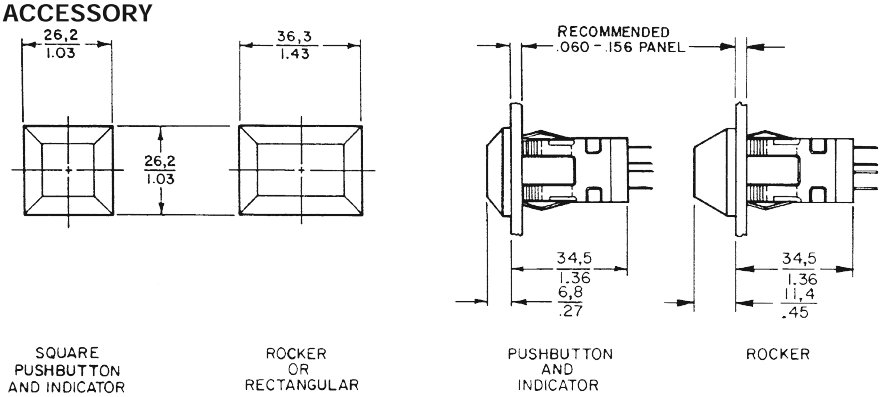

Panel cutouts

Multiple panel sealed units should not be mounted together in a single elongated slot, since this would create an unsealed space between each unit.

Side-by-side mounting can be achieved, per the center-to-center dimensions shown in the drawing. (Dotted lines indicate the seal bases which are abutting at front of panel.)

AML75 seals are not designed for use with the AML61 mounting system.

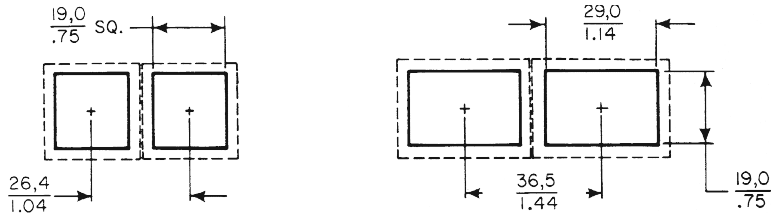

NOTE: Suggested cutout dimensions are based on an .125"/3,18 mm panel thickness. Individual preferences for inpanel fit may require measurement of assemblies before panels are cut.

AML76 SWITCH GUARD ACCESSORY

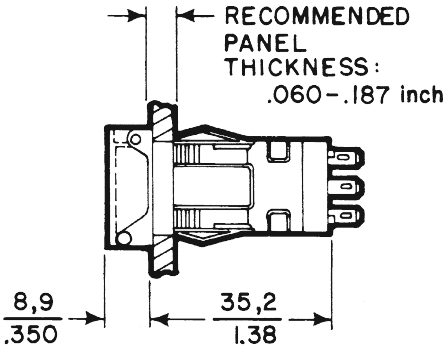

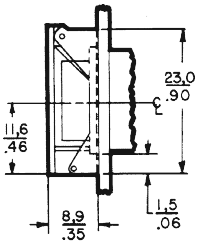

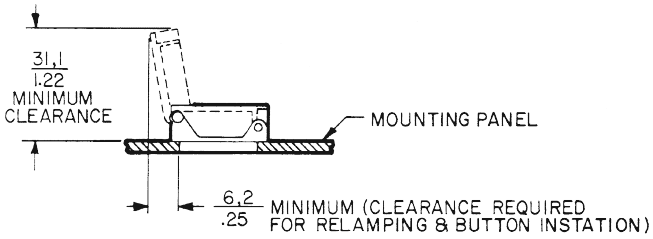

PANEL CUTOUTS

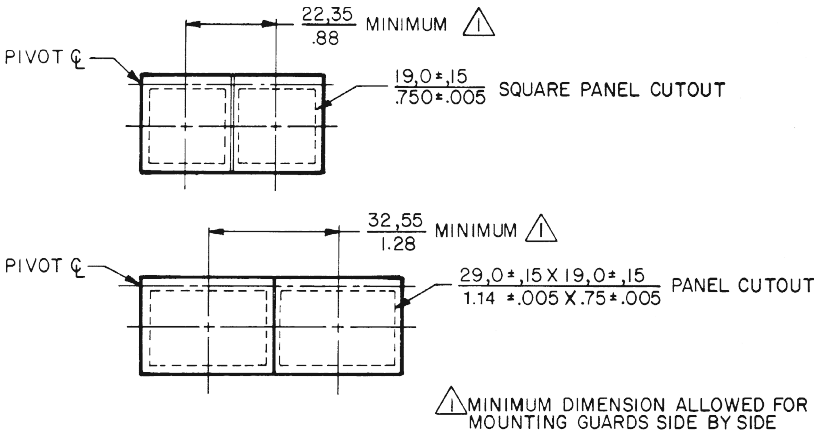

Manuals